Heidi

Cabinet for shoes

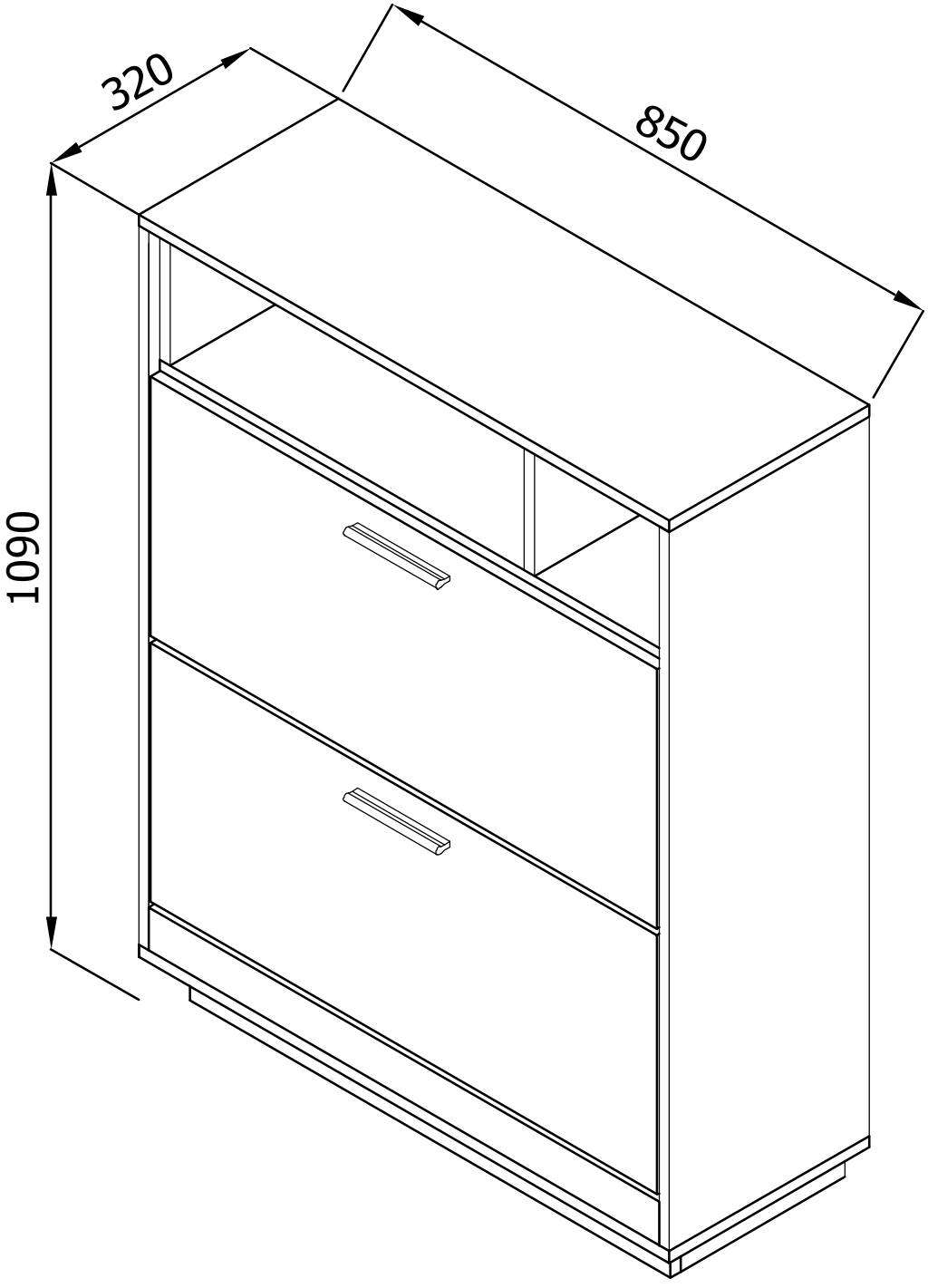

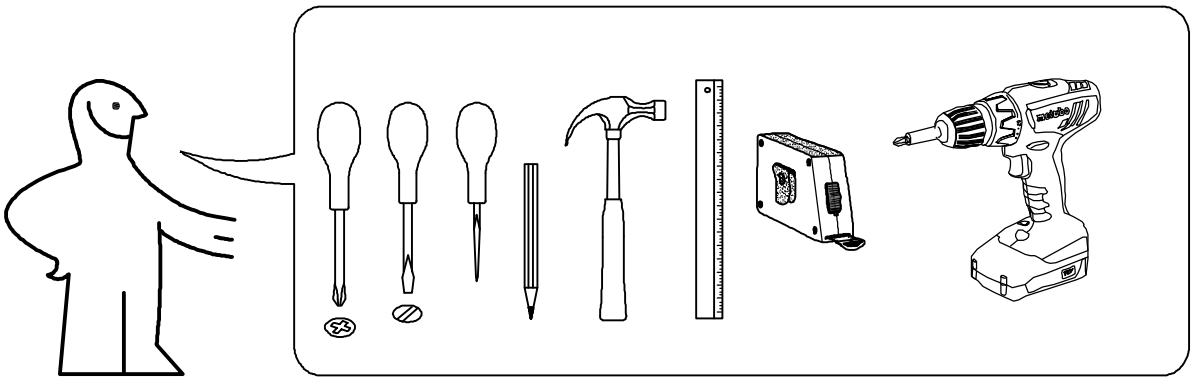

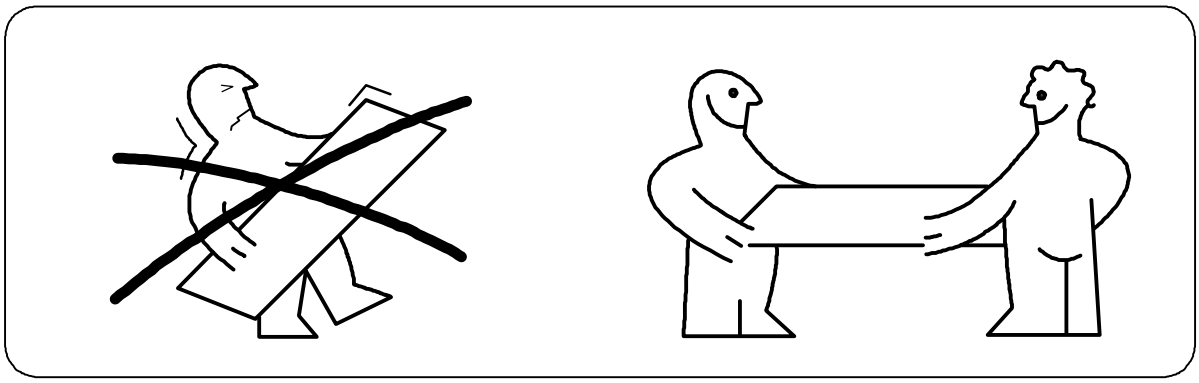

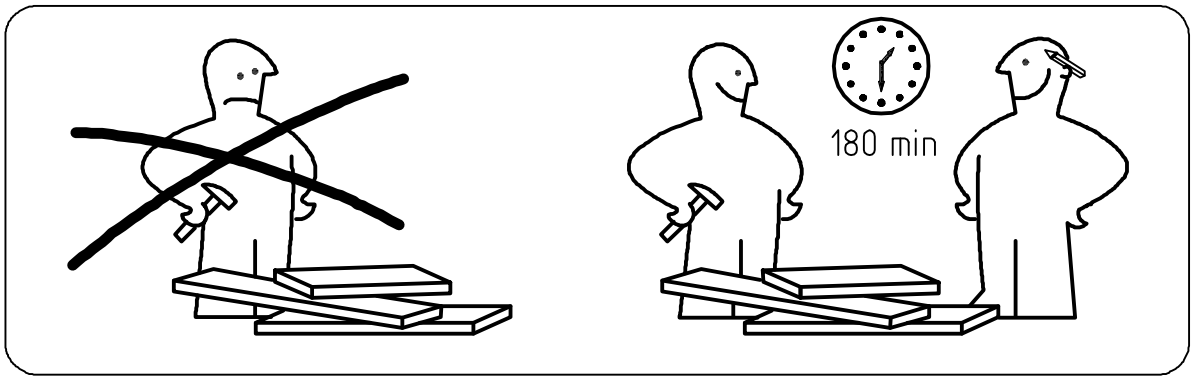
180 min

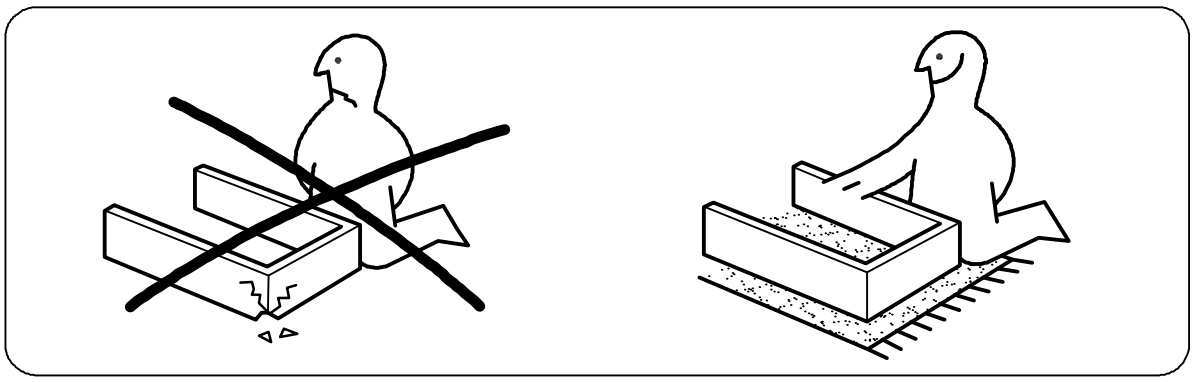

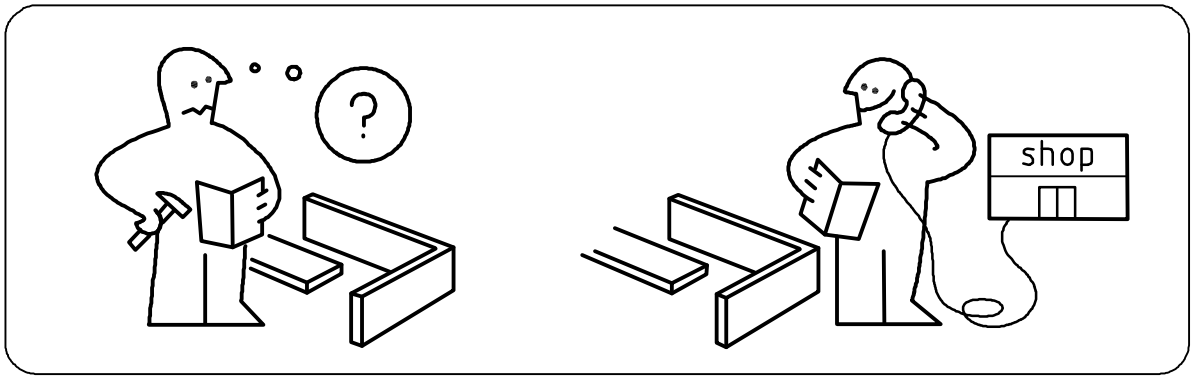
?
shop

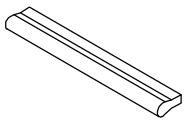 I2 x2	 E-1 4*25mm x4	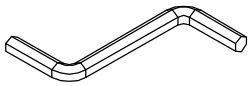 R4 №4 x1
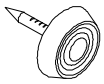 K1 x5	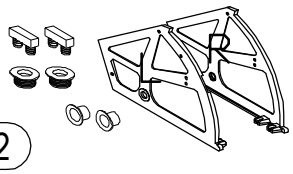 N2 x2	 F4 5*13 x4
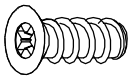 F3 6,3*13 x12	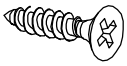 E6 3x15 x12	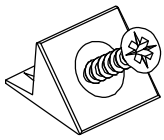 H2 x10
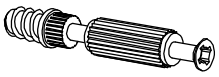 C1 6x43mm x17	 D1 15/16 x17	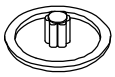 D Ø20mm x17
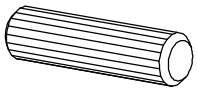 A1 8*30mm x21	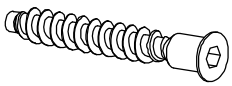 B1 x5	 B ⌀12mm x5
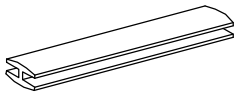 P10 L- 818 mm x1	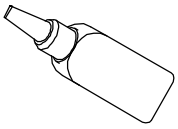 R1 x1	

№	a*b	x	№	a*b	x
1	998x320	1	9	171x818	1
2	998x320	1	10	812x360	2
3	852x320	1	11	808x142	4
4	852x320	1	12	808x90	2
5	818x60	1	13	264x60	3
6	818x288	1	14	770x60	1
7	818x288	1	15	503x828	2
8	171x272	3			

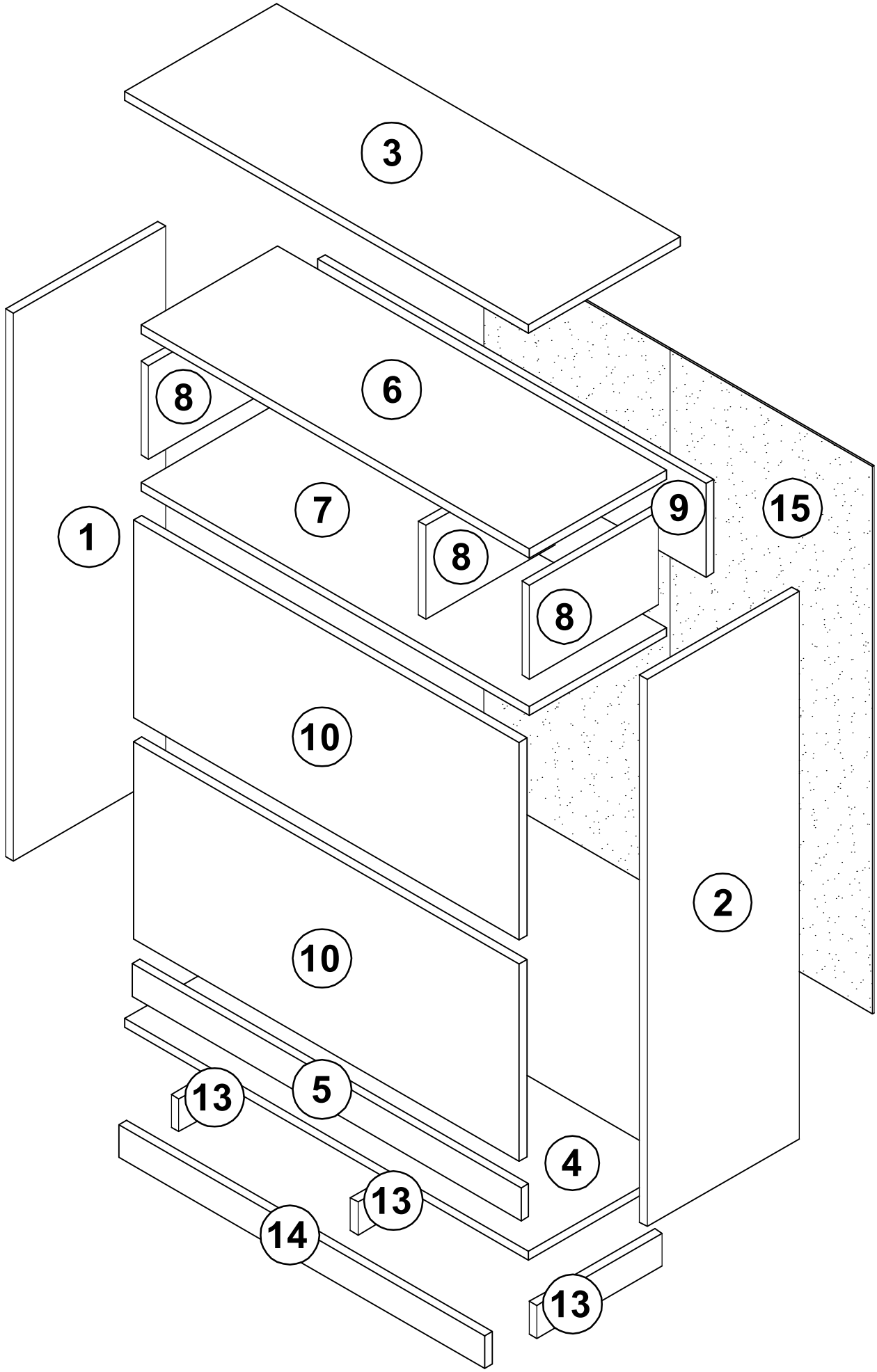
3
6
8
7
8
9
15
1
8
10
10
2
13
5
4
13
14
13

N2 x2	C1 6x43mm x10	D1 15/16 x4
A1 8*30mm x4	R1 x1	

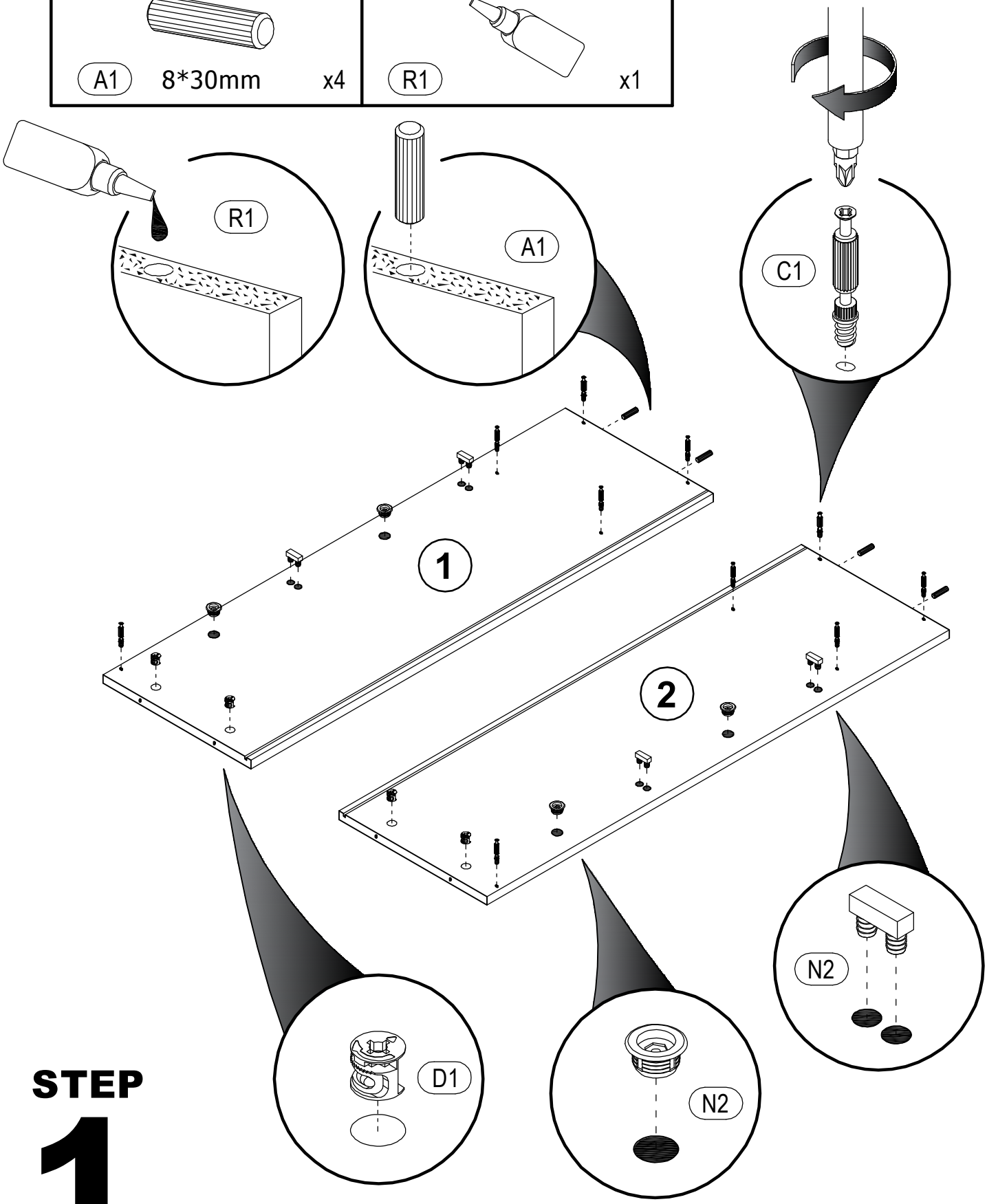

STEP 1

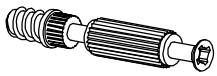 C1 6x43mm x7	 D1 15/16 x13	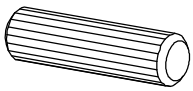 A1 8*30mm x17

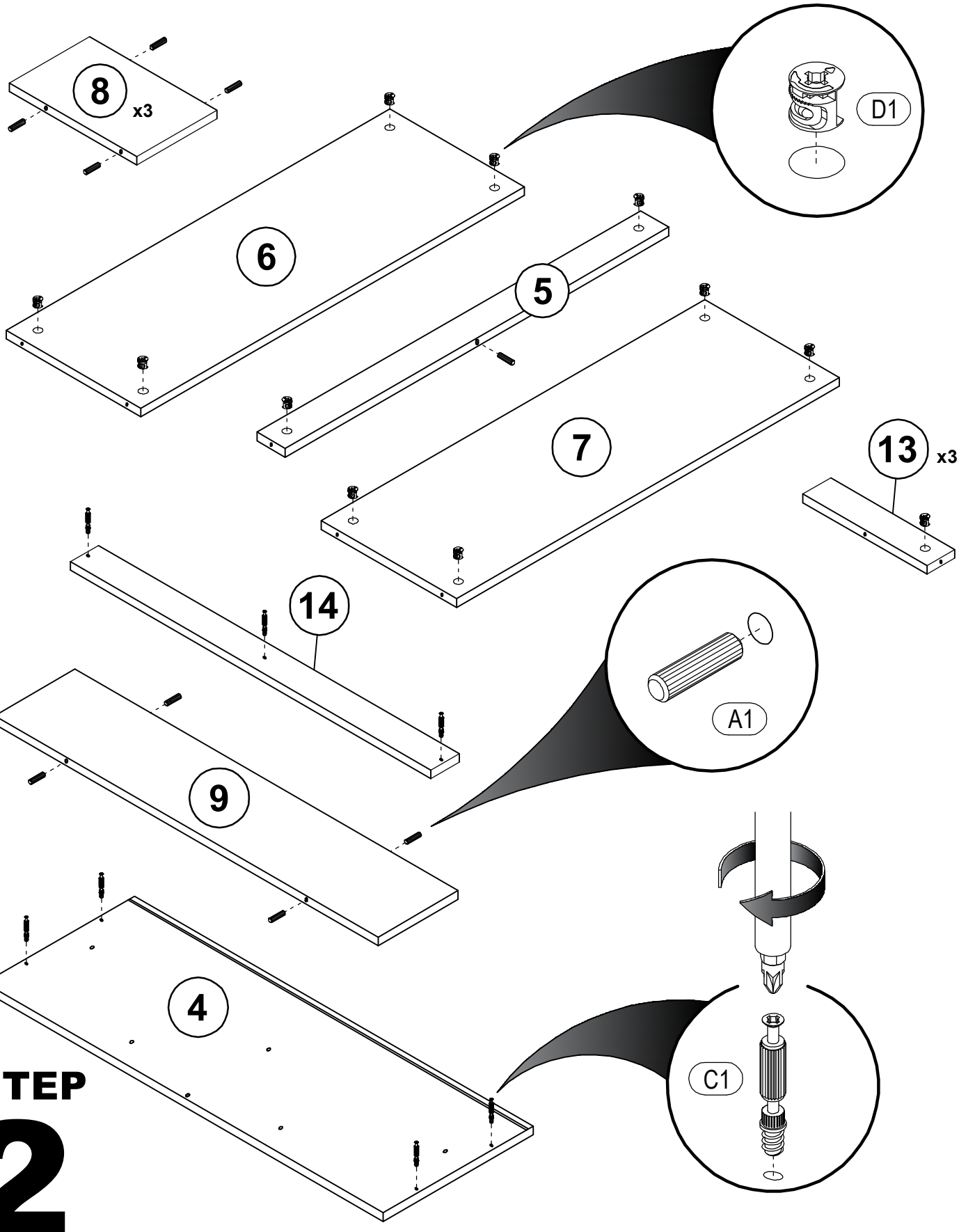

STEP 2

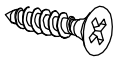 E6 3x15 x12	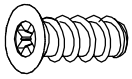 F3 6,3*13 x8	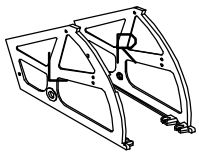 N2 x2

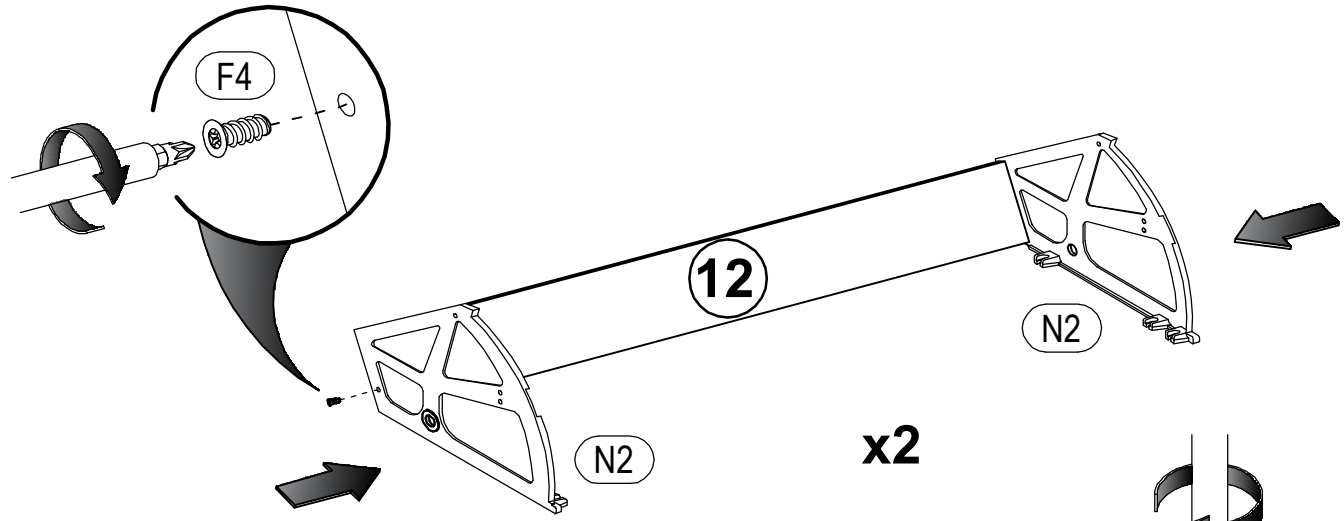

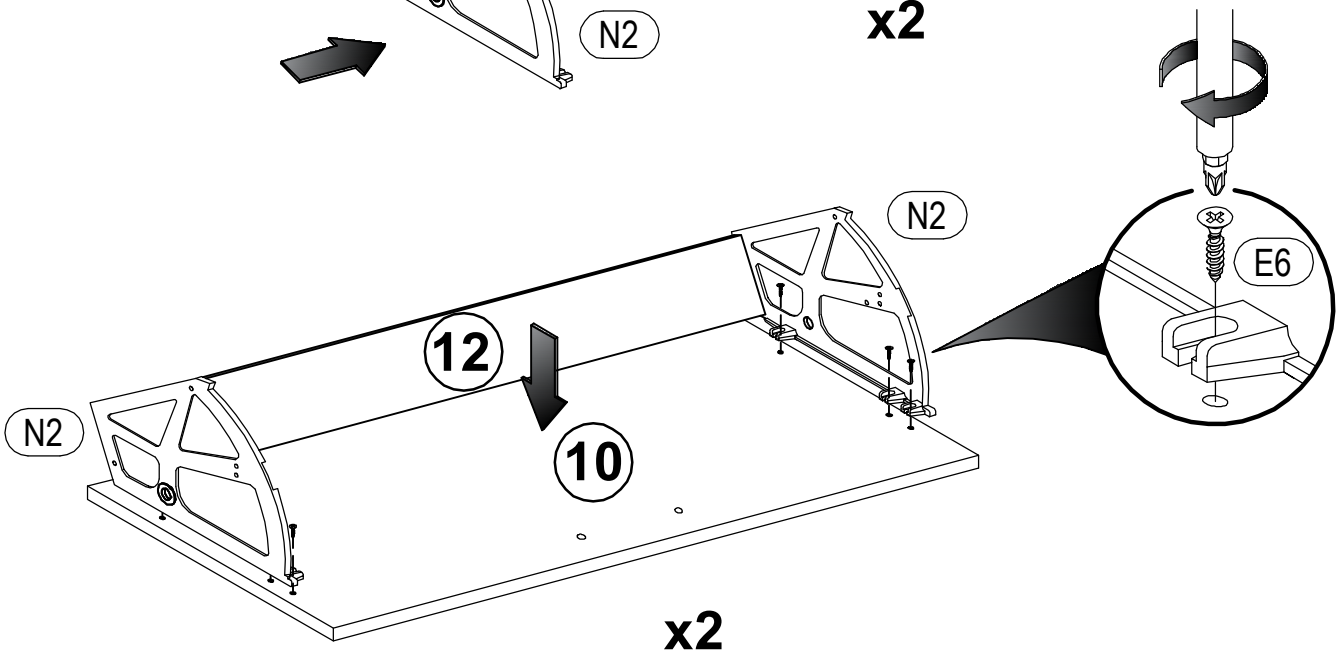

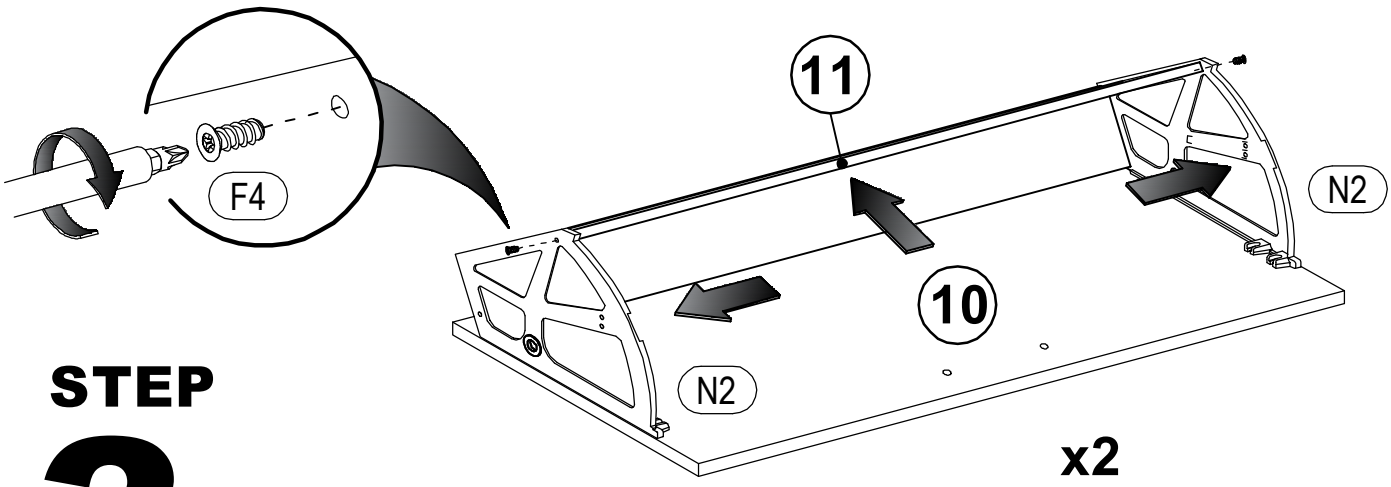

STEP

3

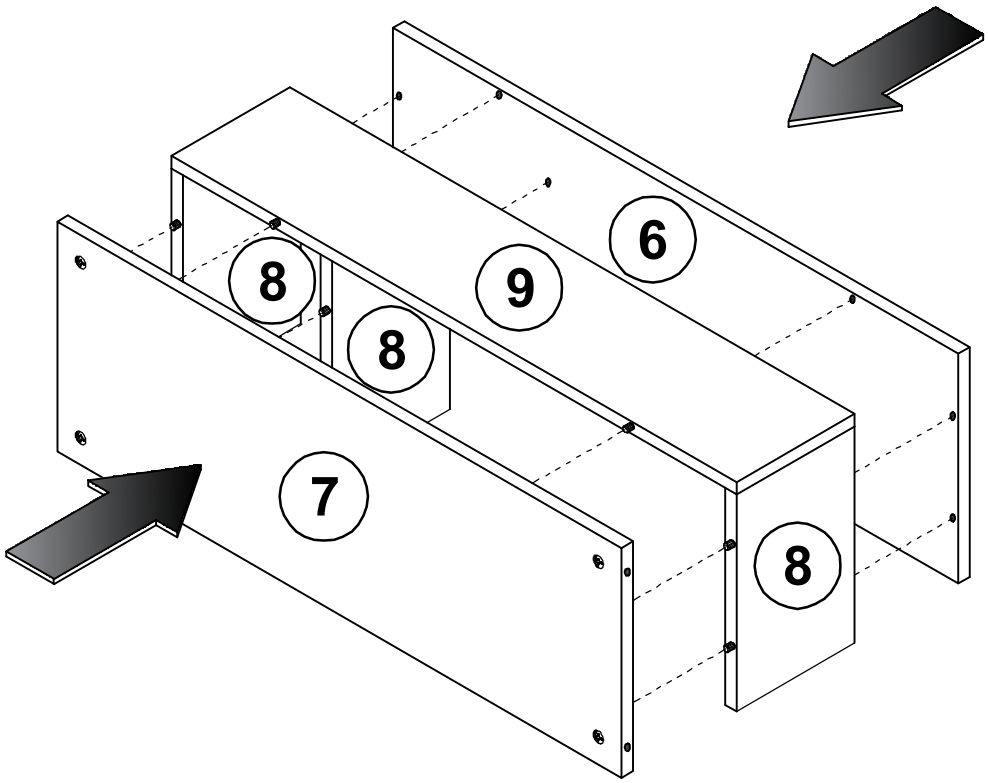

STEP 4

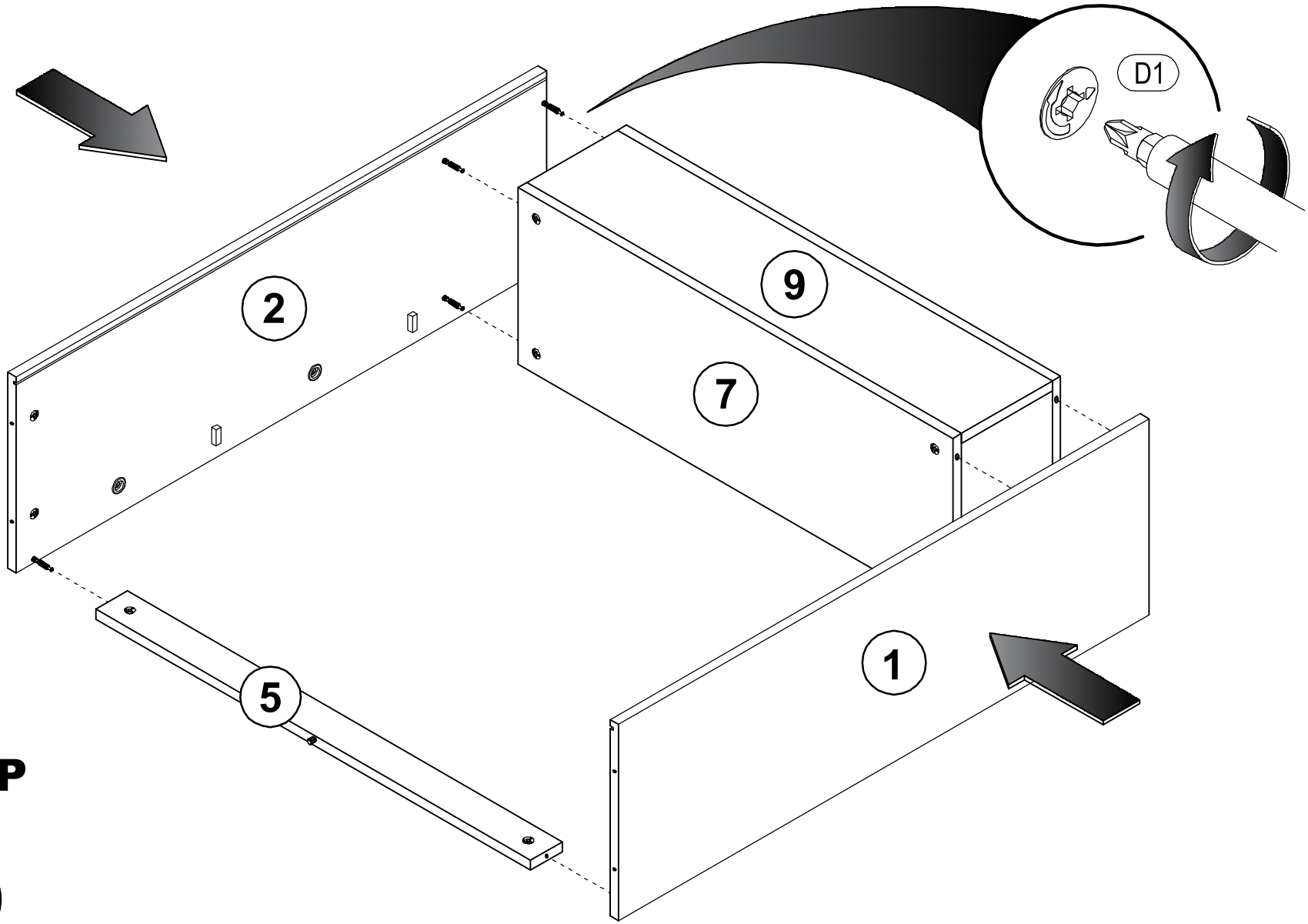

STEP
5

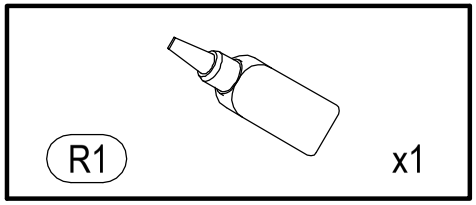

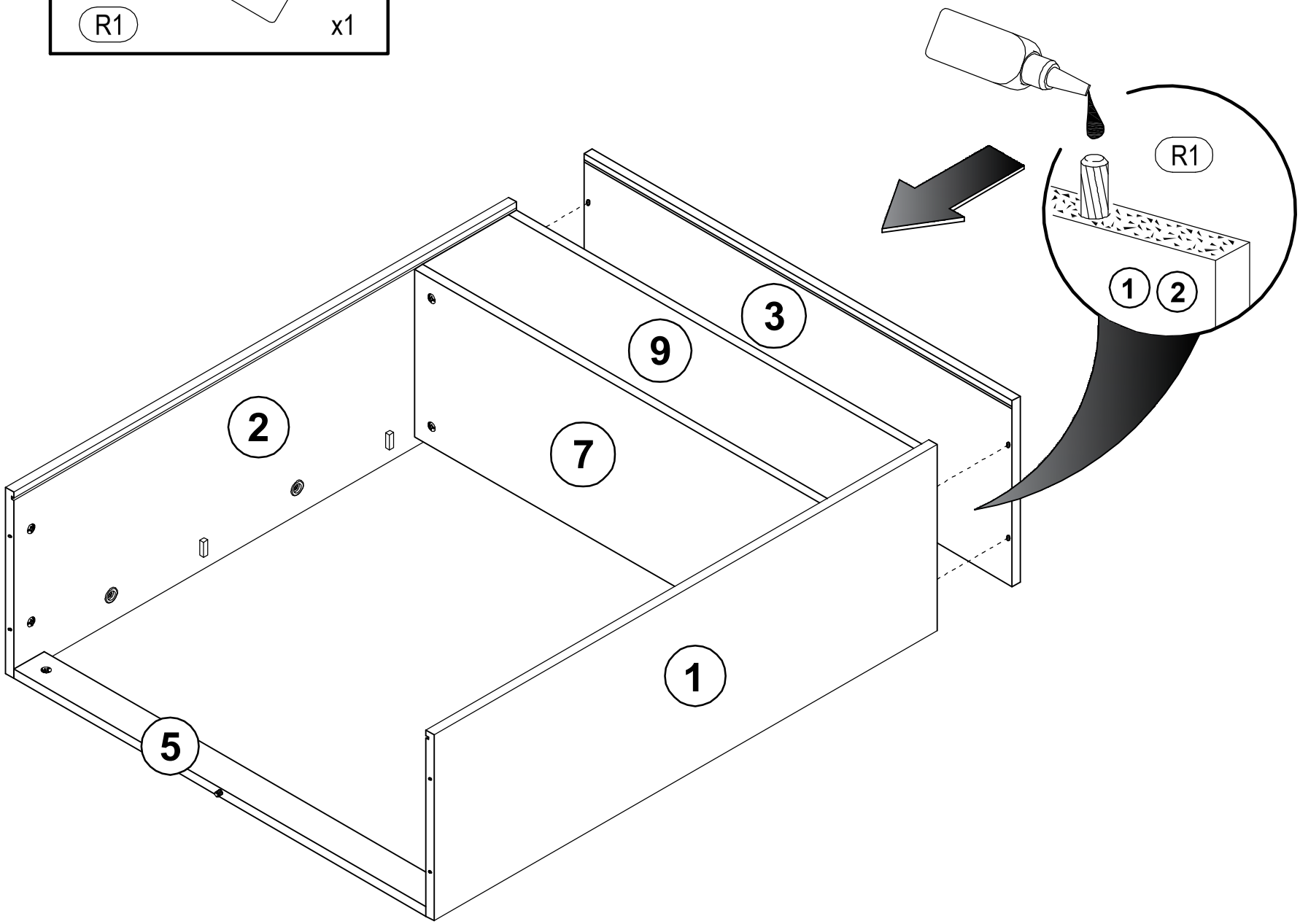

STEP

6

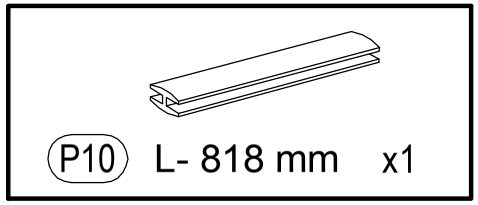

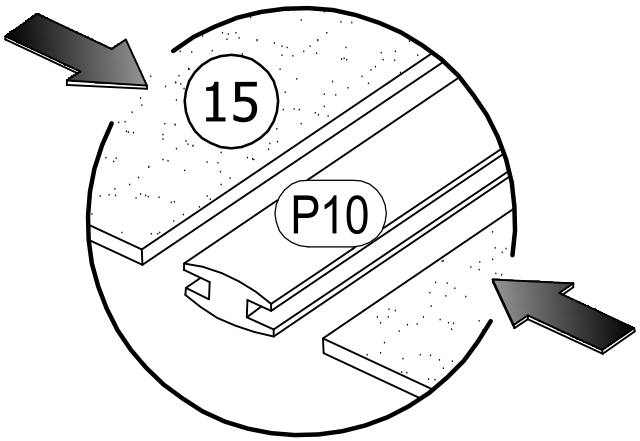

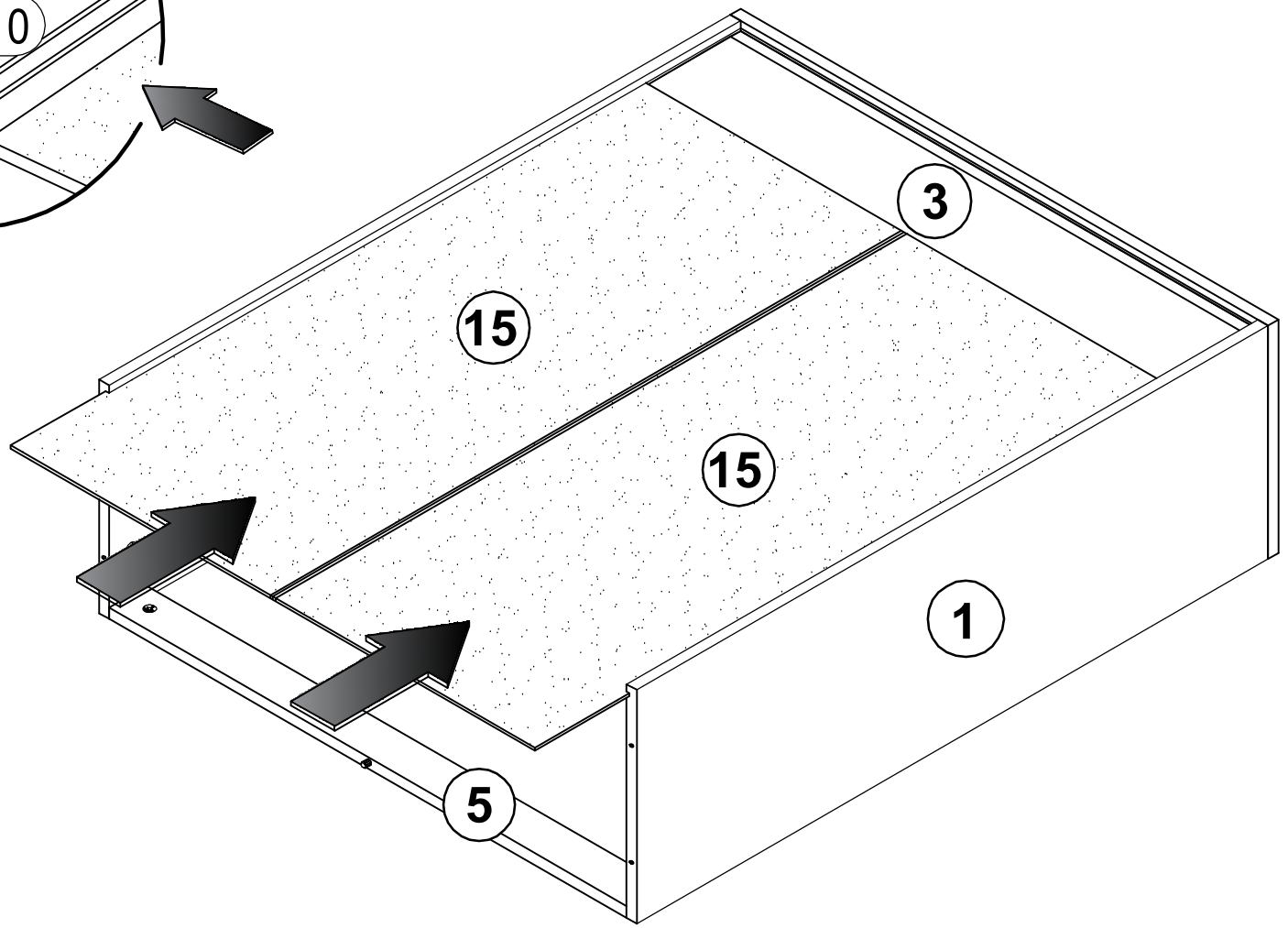

STEP

7

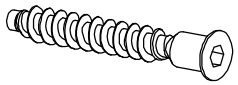 B1 x5	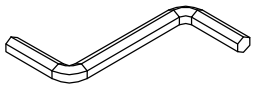 R4 №4 x1

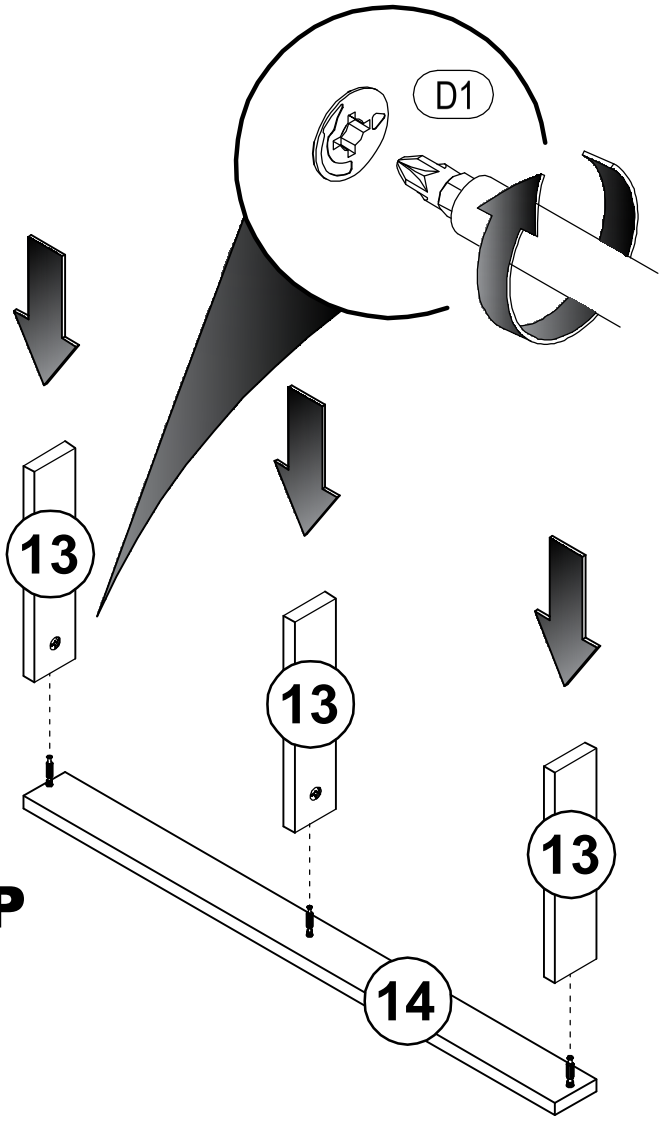

STEP
8

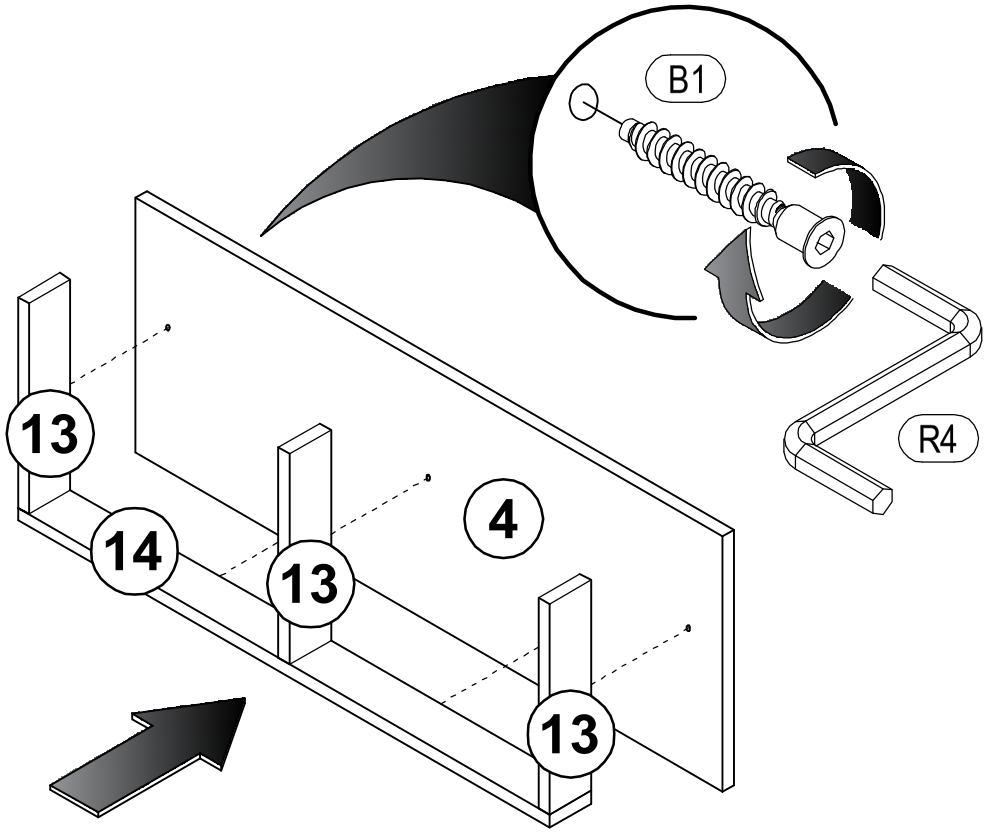

STEP
9

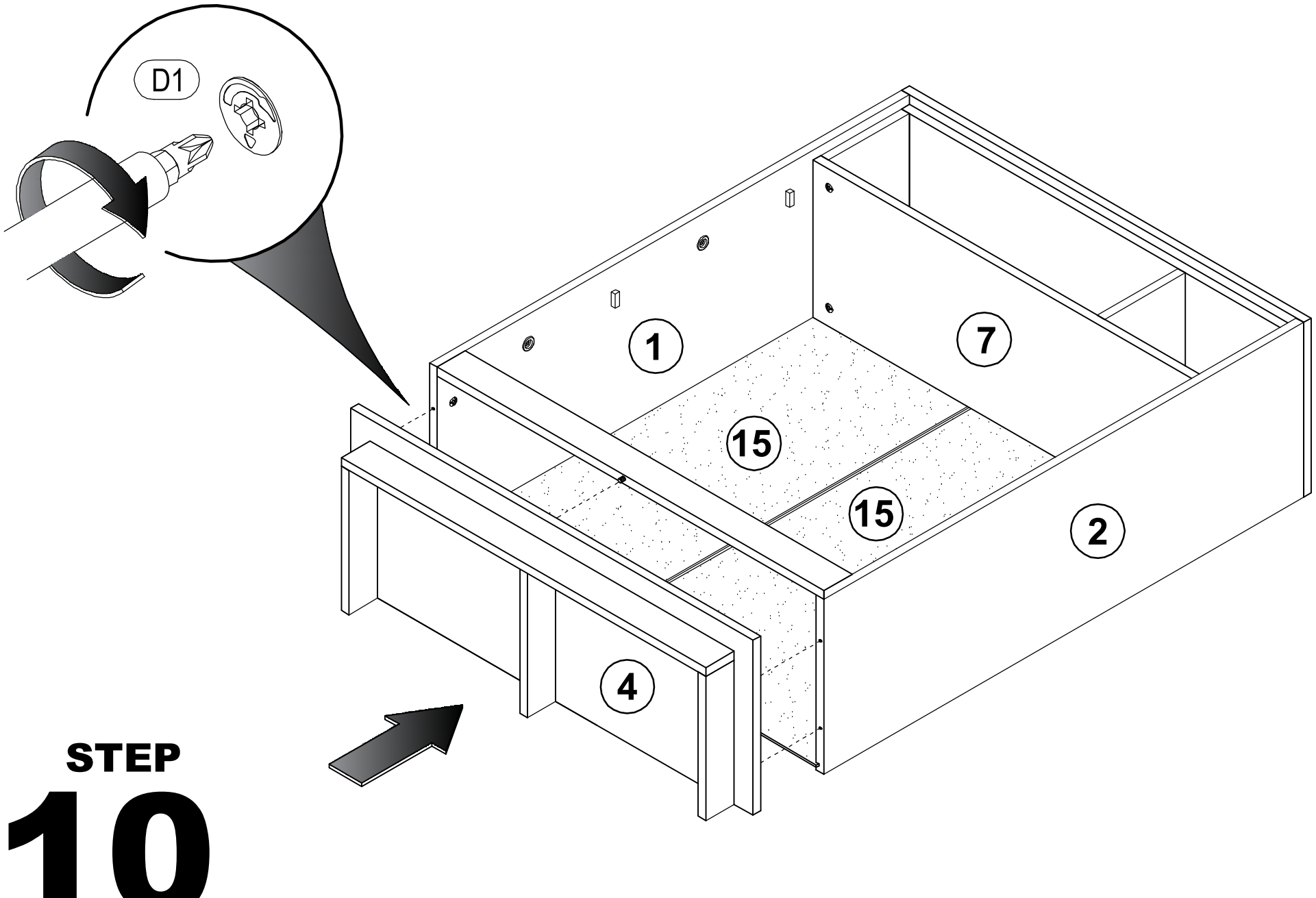

STEP
10

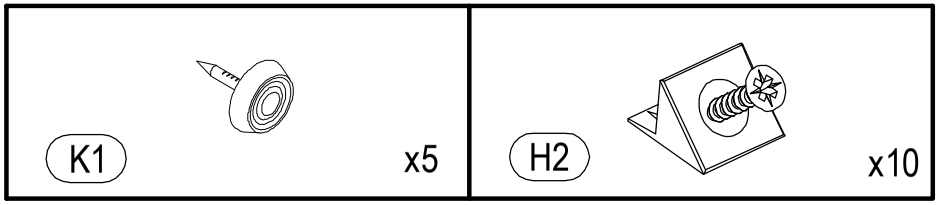

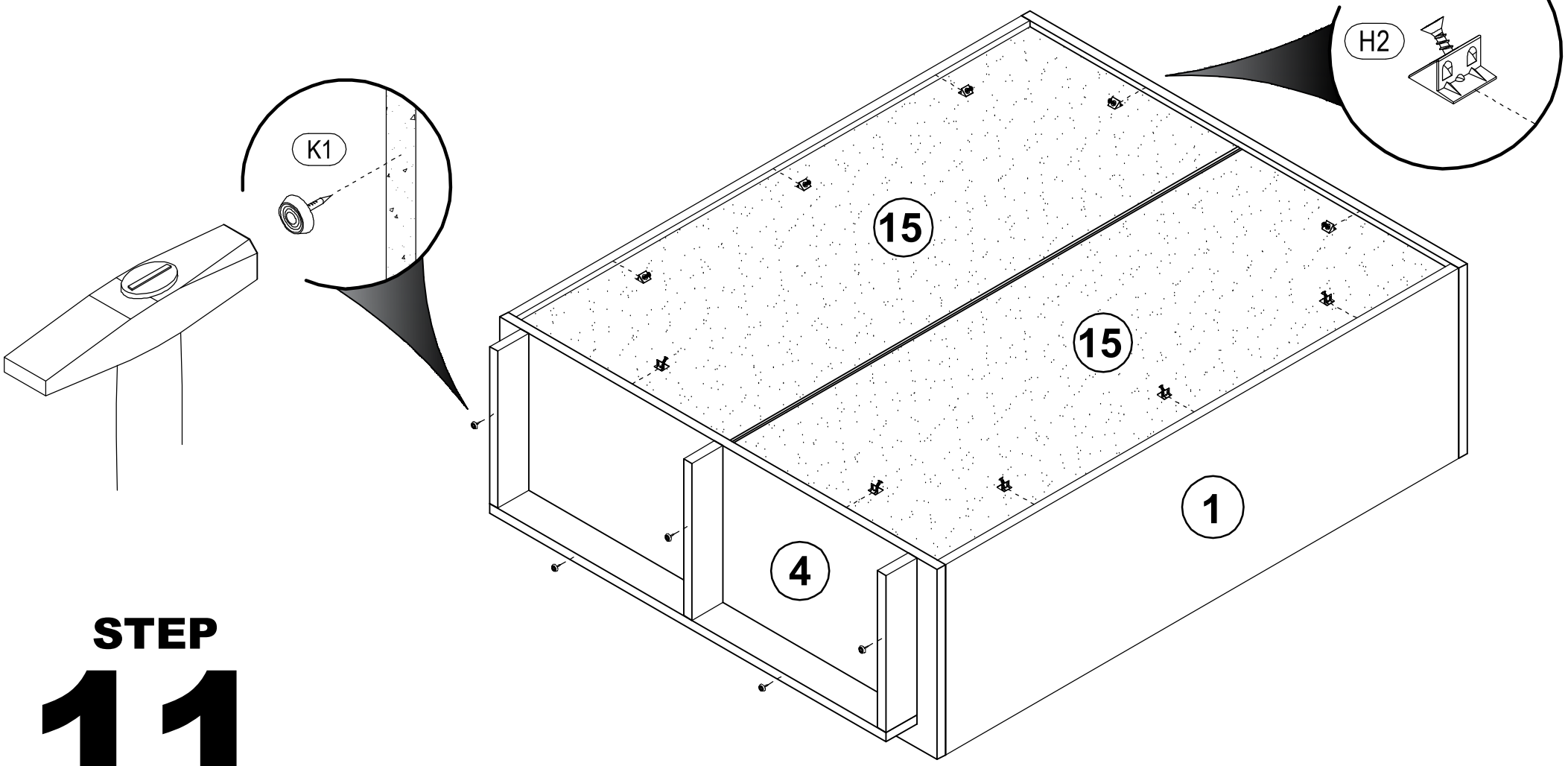

STEP

11

 N2 x4	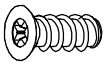 F4 5*13 x4

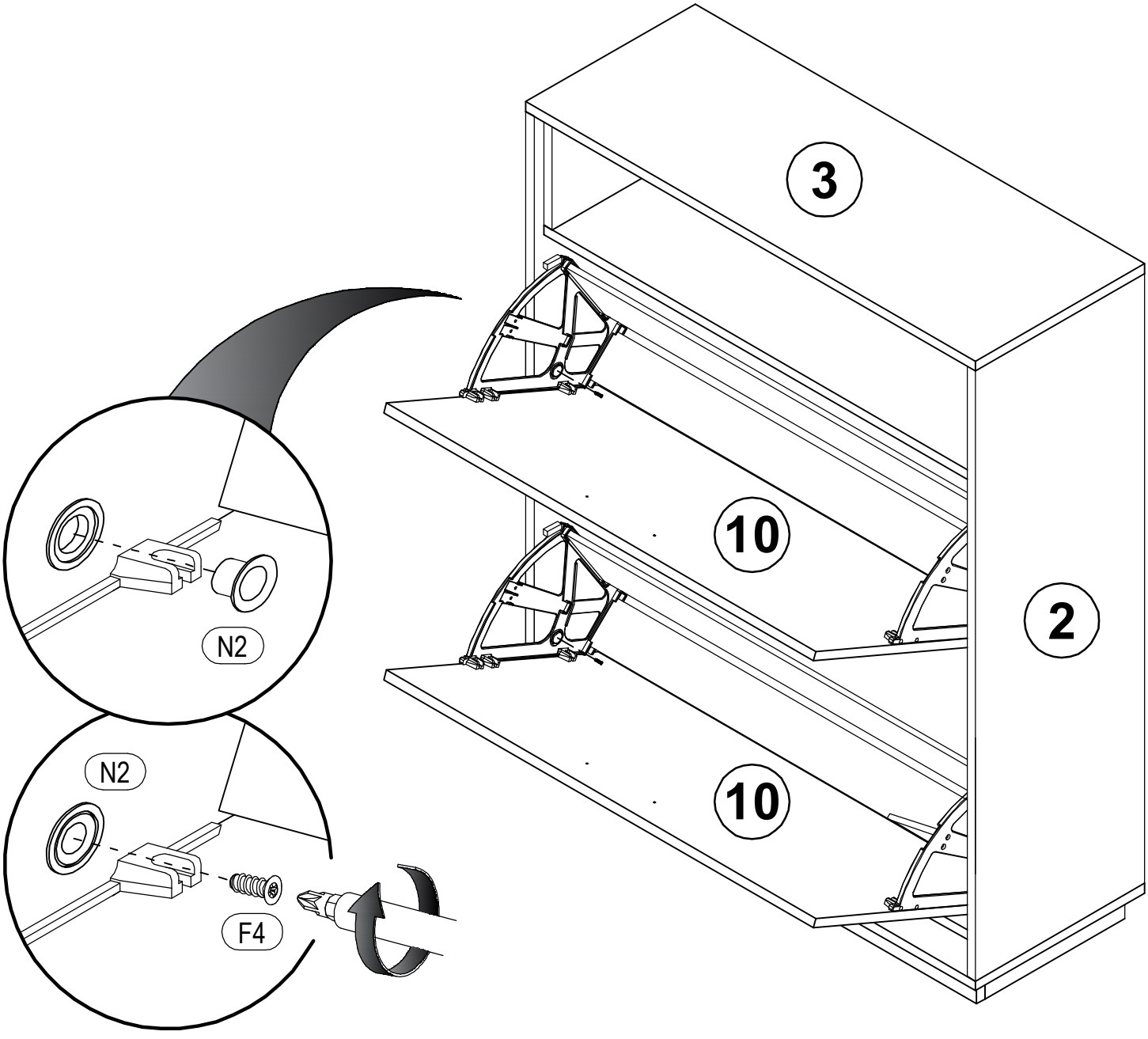

STEP 12

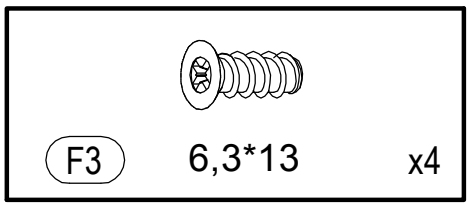

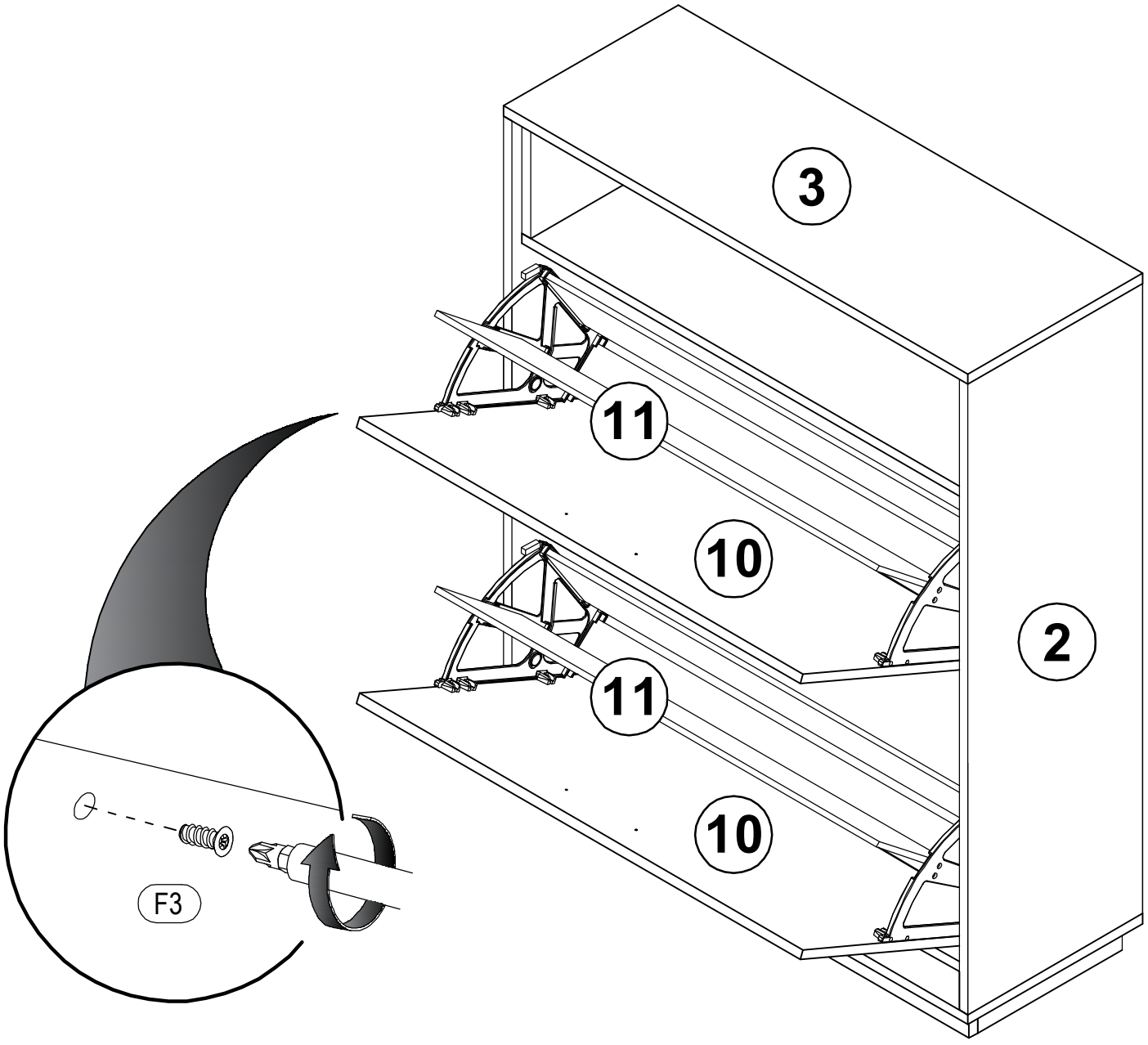

STEP
13

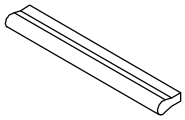 I2 x2	 E-1 4*25mm x4

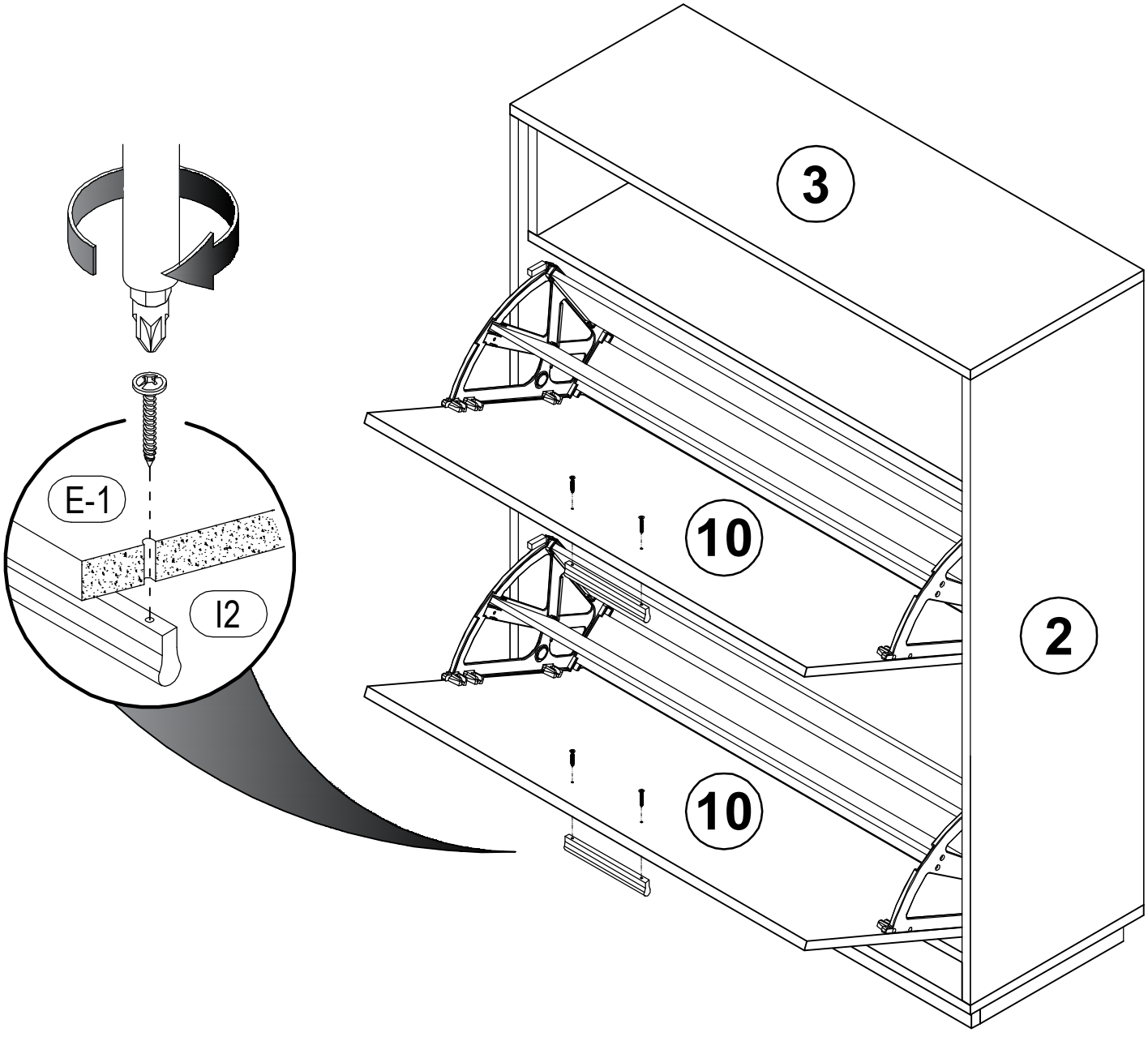

STEP 14

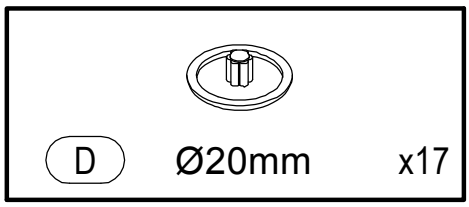

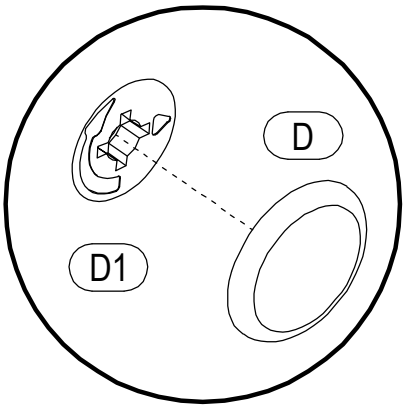

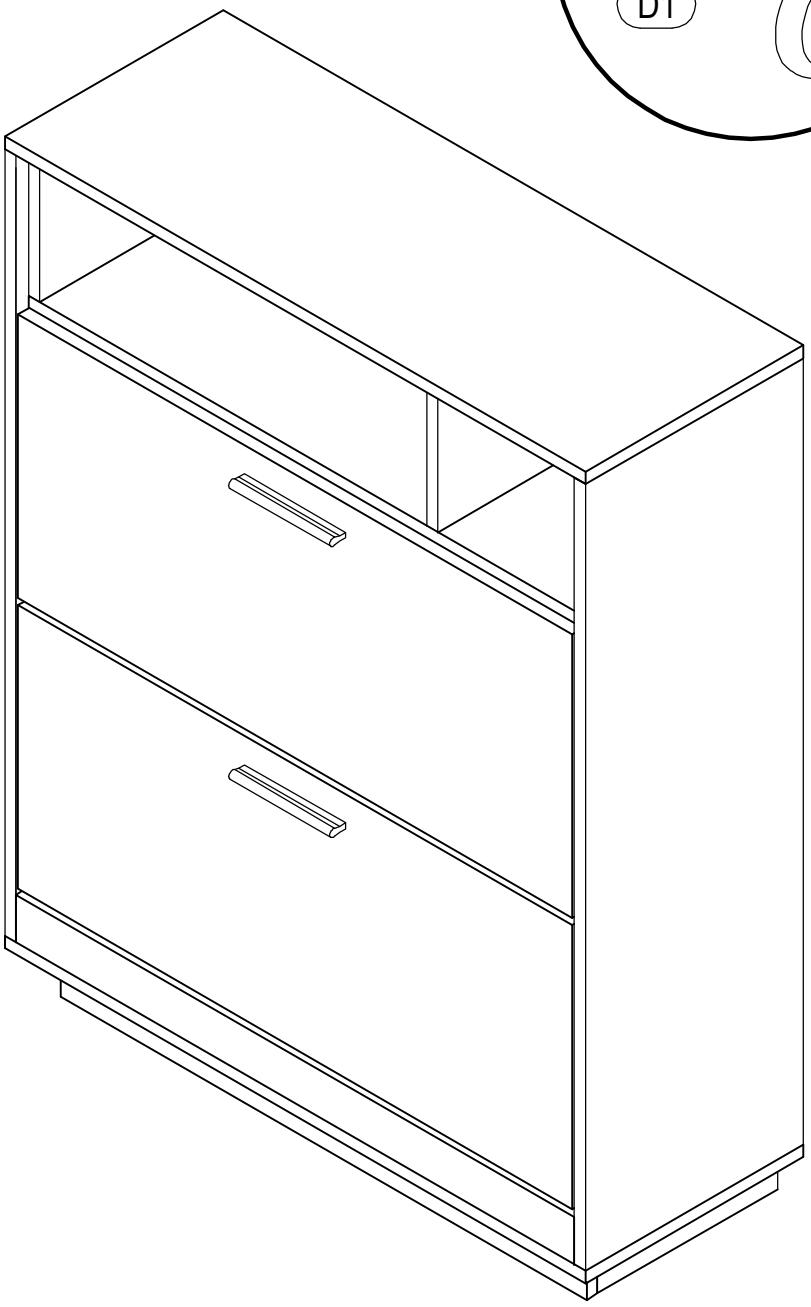

STEP
15



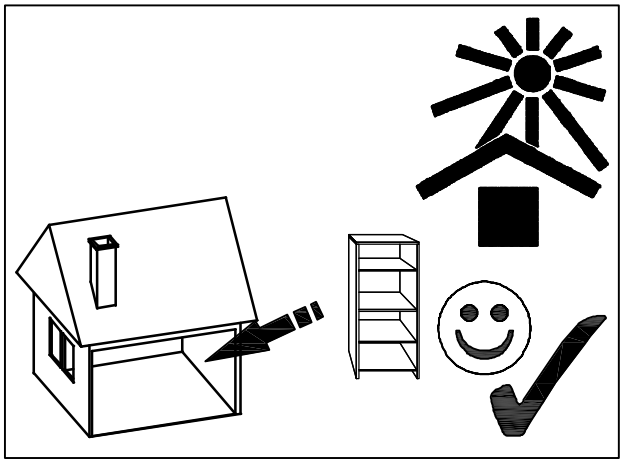

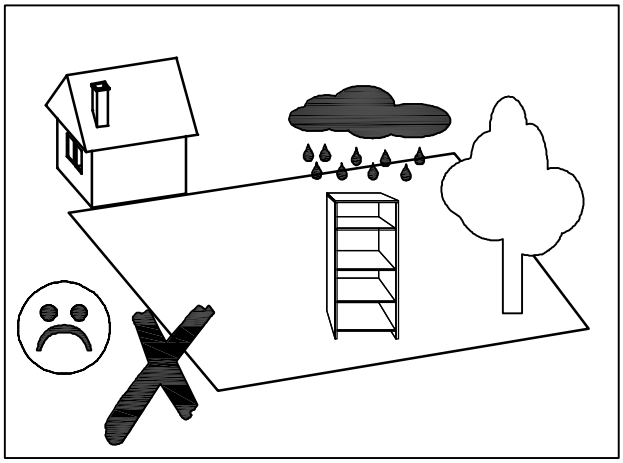

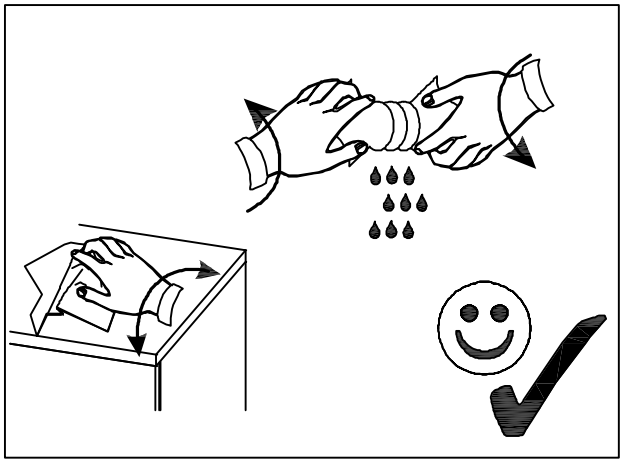

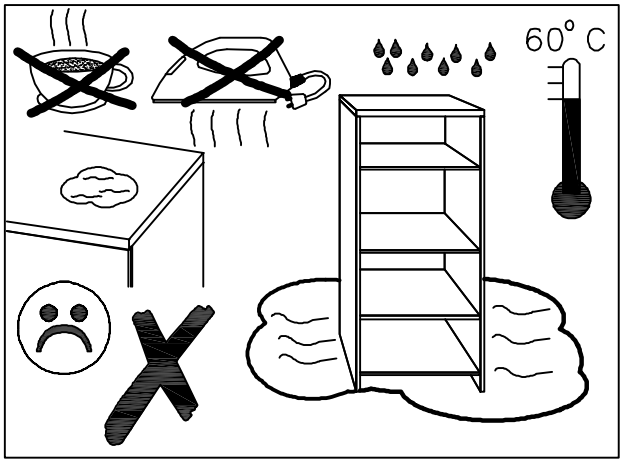
60° C

